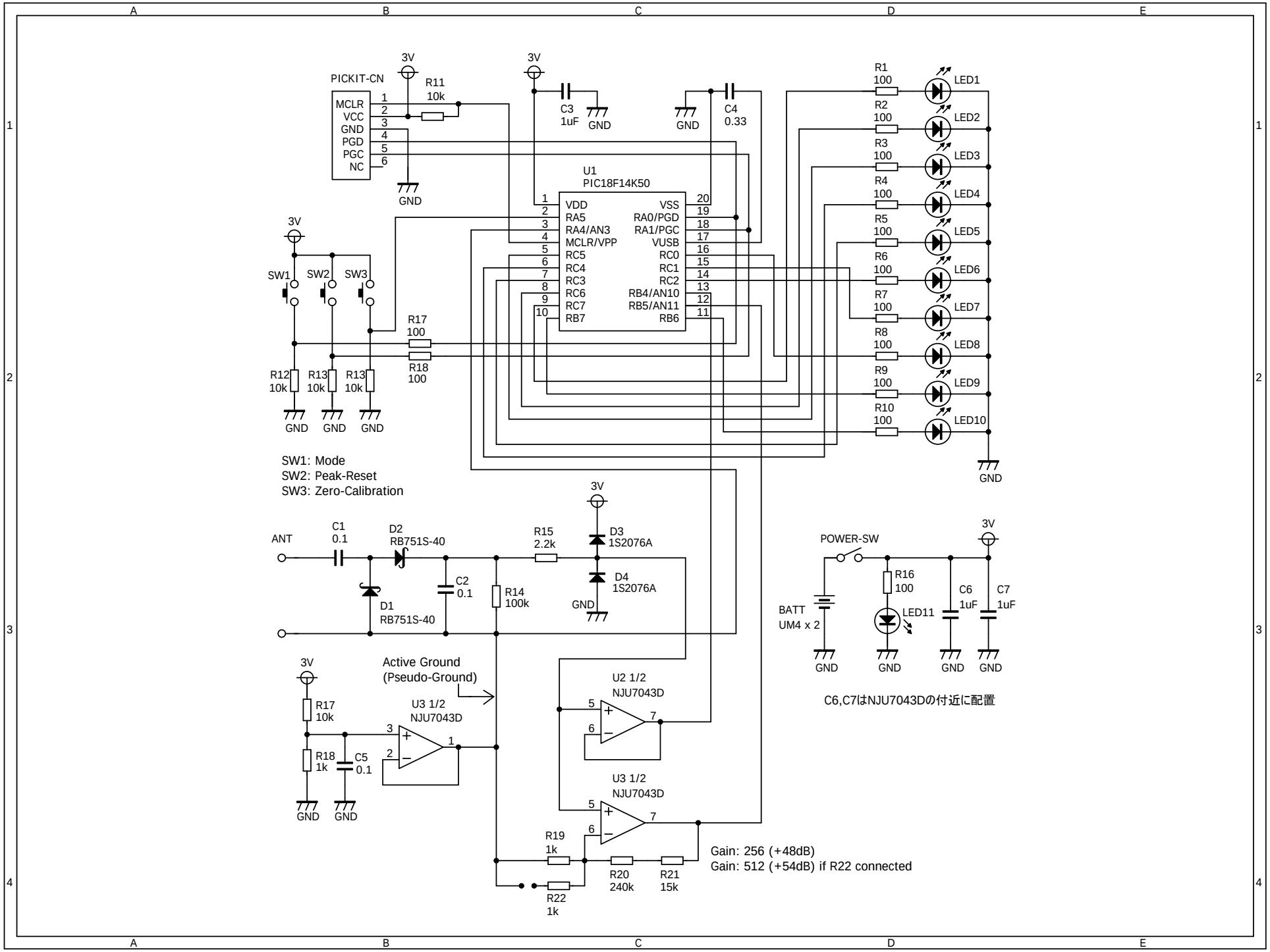
PICKIT-CN
MCLR
VCC
GND
PGD
PGC
NC
R11
10k
3V
GND
C3
1uF
C4
0.33
U1
PIC18F14K50
VDD
RA5
RA4/AN3
MCLR/VPP
RC5
RC4
RC3
RC6
RC7
RB7
VSS
RA0/PGD
RA1/PGC
VUSB
RC0
RC1
RC2
RB4/AN10
RB5/AN11
RB6
R1 100
R2 100
R3 100
R4 100
R5 100
R6 100
R7 100
R8 100
R9 100
R10 100
LED1
LED2
LED3
LED4
LED5
LED6
LED7
LED8
LED9
LED10
SW1
SW2
SW3
R17 100
R18 100
R12 10k
R13 10k
R13 10k
SW1: Mode
SW2: Peak-Reset
SW3: Zero-Calibration
ANT
C1
0.1
D2
RB751S-40
D1
RB751S-40
C2
0.1
R14
100k
R15
2.2k
D3
1S2076A
D4
1S2076A
POWER-SW
BATT
UM4 x 2
R16
100
LED11
C6
1uF
C7
1uF
C6,C7はNJU7043Dの付近に配置
Active Ground
(Pseudo-Ground)
R17
10k
R18
1k
C5
0.1
U3 1/2
NJU7043D
U2 1/2
NJU7043D
U3 1/2
NJU7043D
R19
1k
R20
240k
R21
15k
R22
1k
Gain: 256 (+48dB)
Gain: 512 (+54dB) if R22 connected